24122-E1-XL

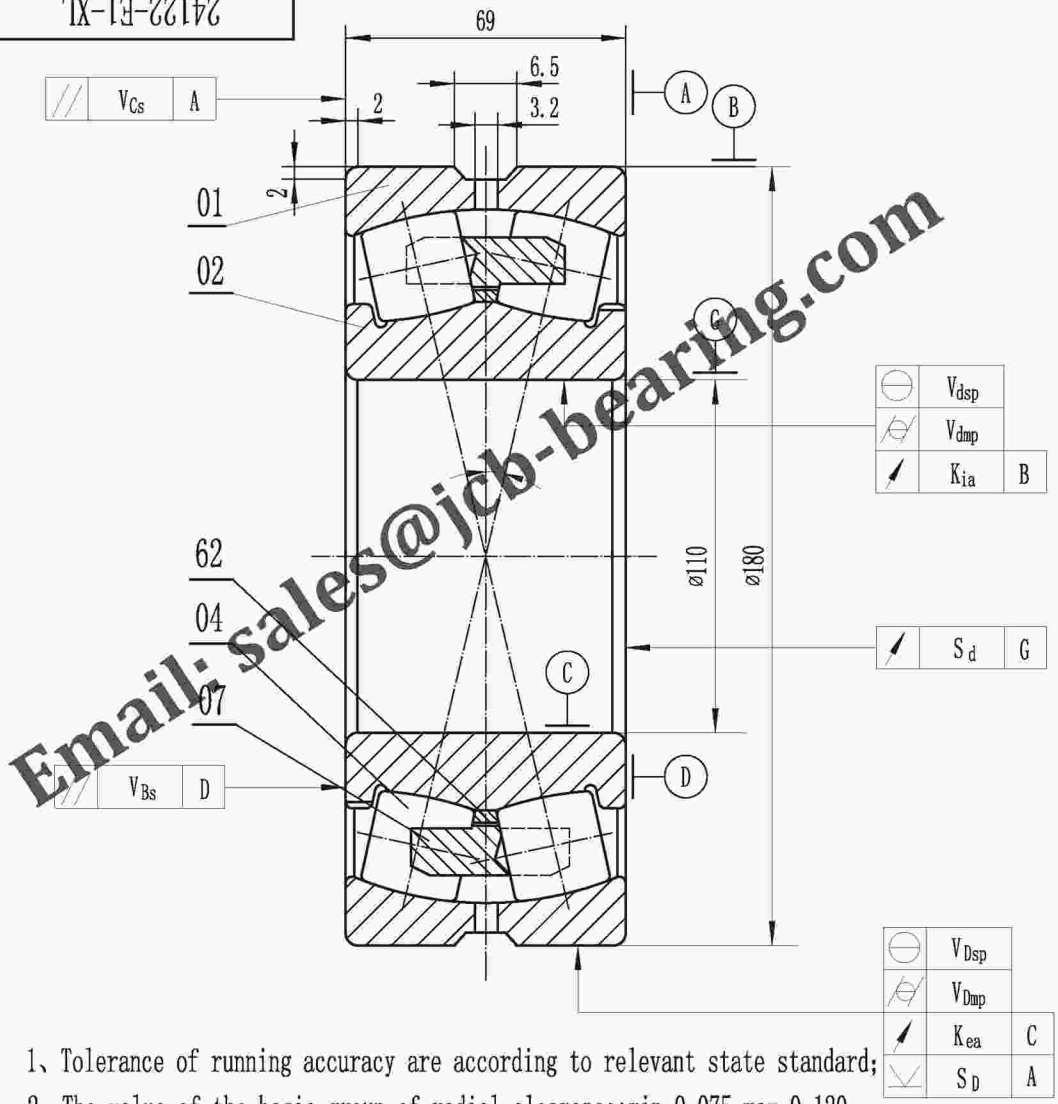

Email: sales@jcb-bearing.com

1、Tolerance of running accuracy are according to relevant state standard;

2、The value of the basic group of radial clearance:min 0.075 max 0.120 ;

3、Rated load: Cr=530 kN Cor=750 kN。

No.	Designation	Qty	Material	unit	toatl	Remark
				Weight (kg)		
62	Guide ring	1	Steel 20—GB/T699			
07	Cage	2	Brass CuZn39Pb2-EN 1652:1997			
04	Roller		Steel 100CrMnSi6-4—ISO 683-17:1999			
02	Inner ring	1	Steel 100CrMnSi6-4—ISO 683-17:1999			
01	Outer ring	1	Steel 100CrMnSi6-4—ISO 683-17:1999			

Luoyang JCB Bearing Technology Co., Ltd
Contact information
Company Address : No. 285, Fenghua road,
Luoyang, Henan, China.
Postal code : 471000
Phone :86-379-68611678
Fax : 86-379-68611679
E-mail: sales@jcb-bearing.com
Reserved E-mail: sales@sphericalrollerbearing.net
Website: www.jcb-bearing.com
www.sphericalrollerbearing.net

Spherical Roller Bearing

24122-E1-XL

	Weight (kg)	Scale
S	6.9	——
Total page 5	Page No. 1	

Luoyang JCB Bearing Technology Co., Ltd